versacart

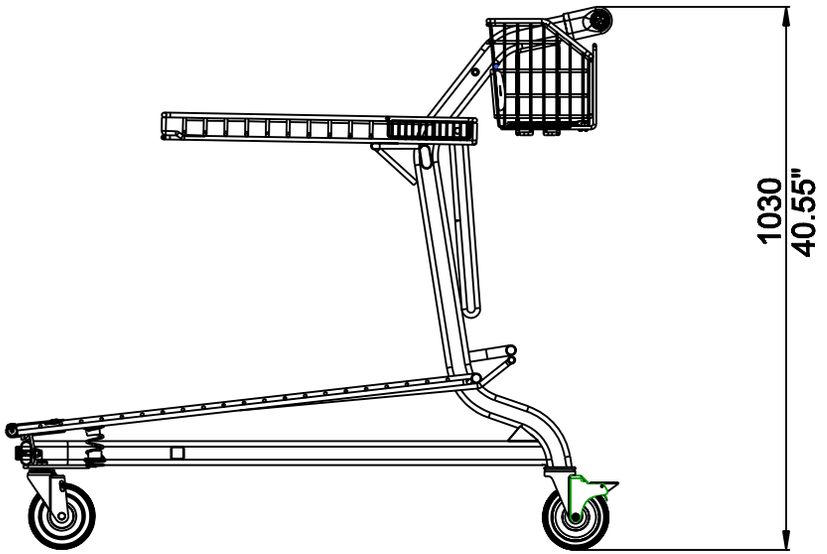

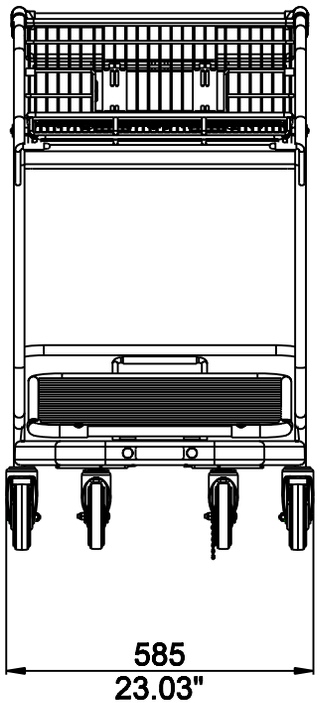

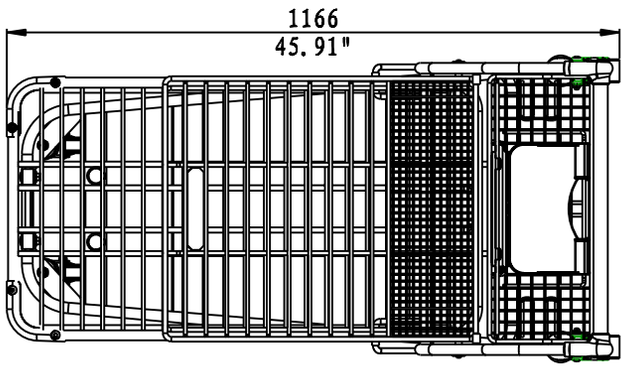

Designs and drawings are confidential.
Designs, drawings and products are the property of Versacart Systems, Inc.
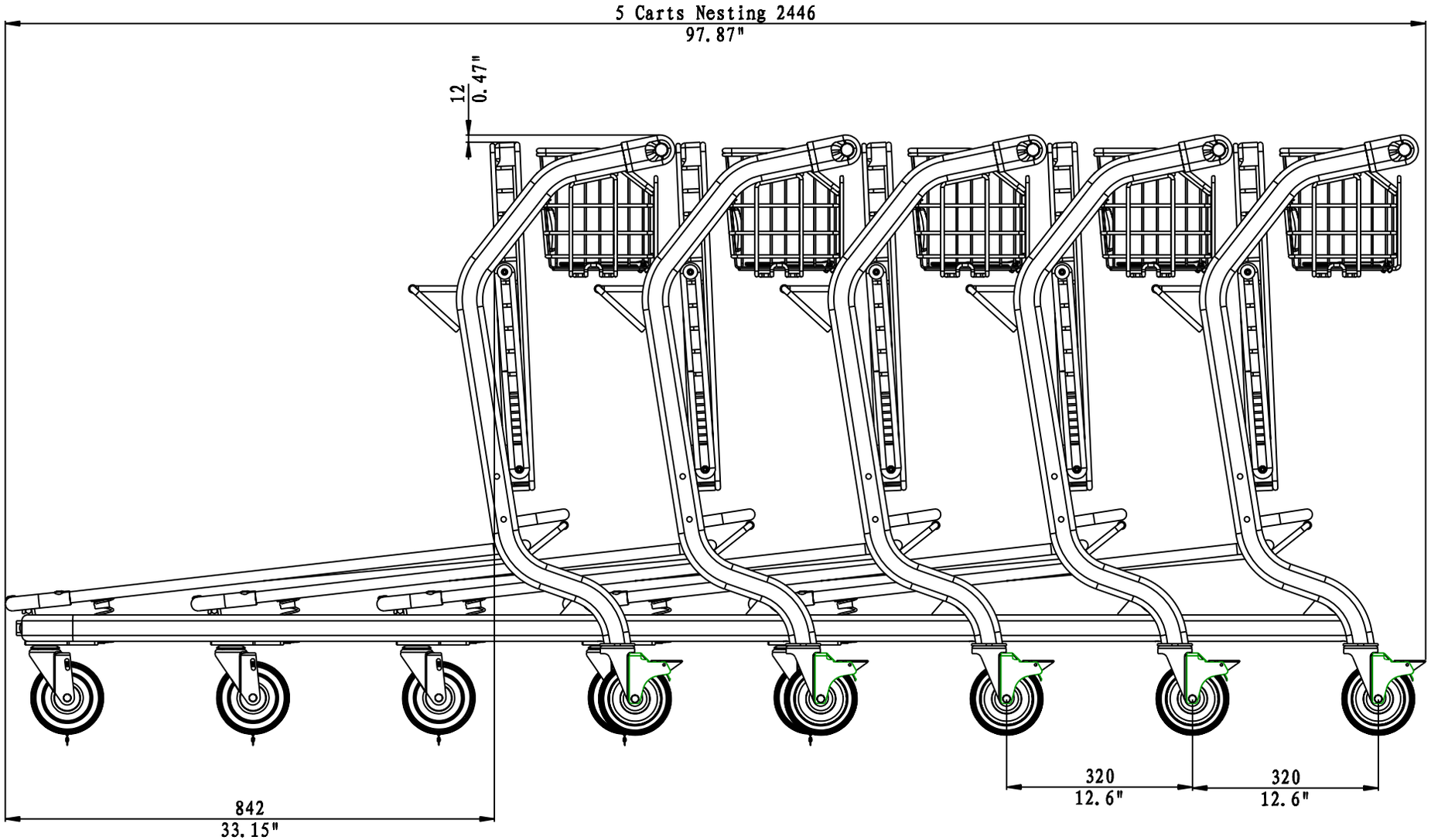
versacart