versacart

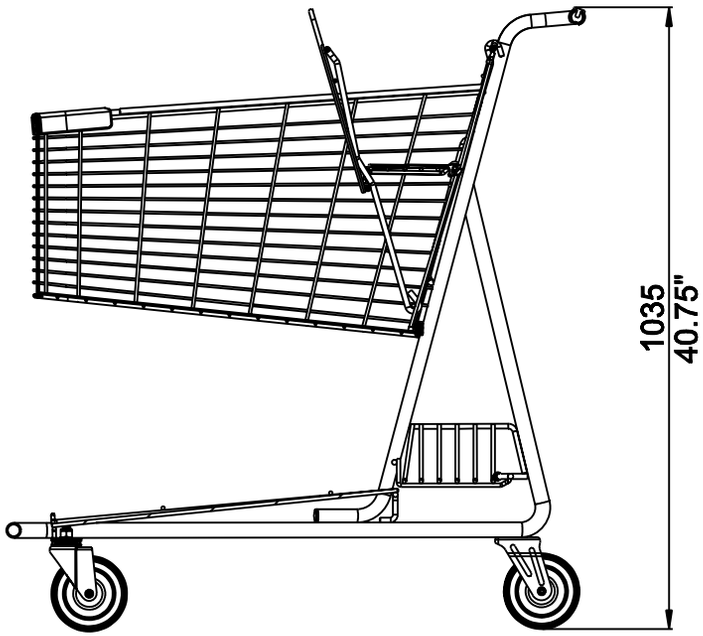

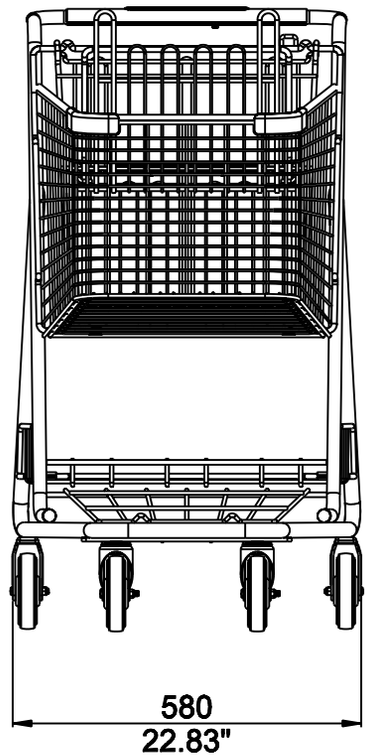

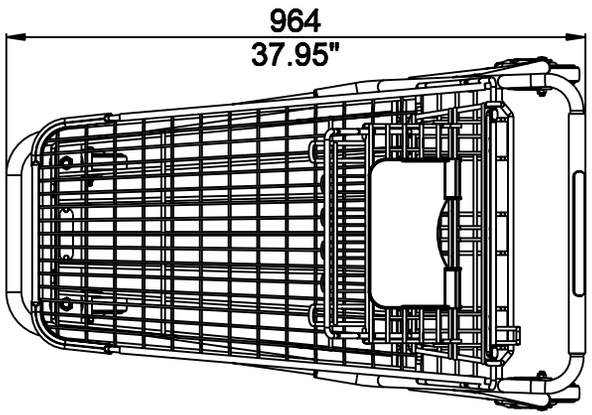

Designs and drawings are confidential.
Designs, drawings and products are the property of Versacart Systems, Inc.

101-C115-T V00120190309

versacart

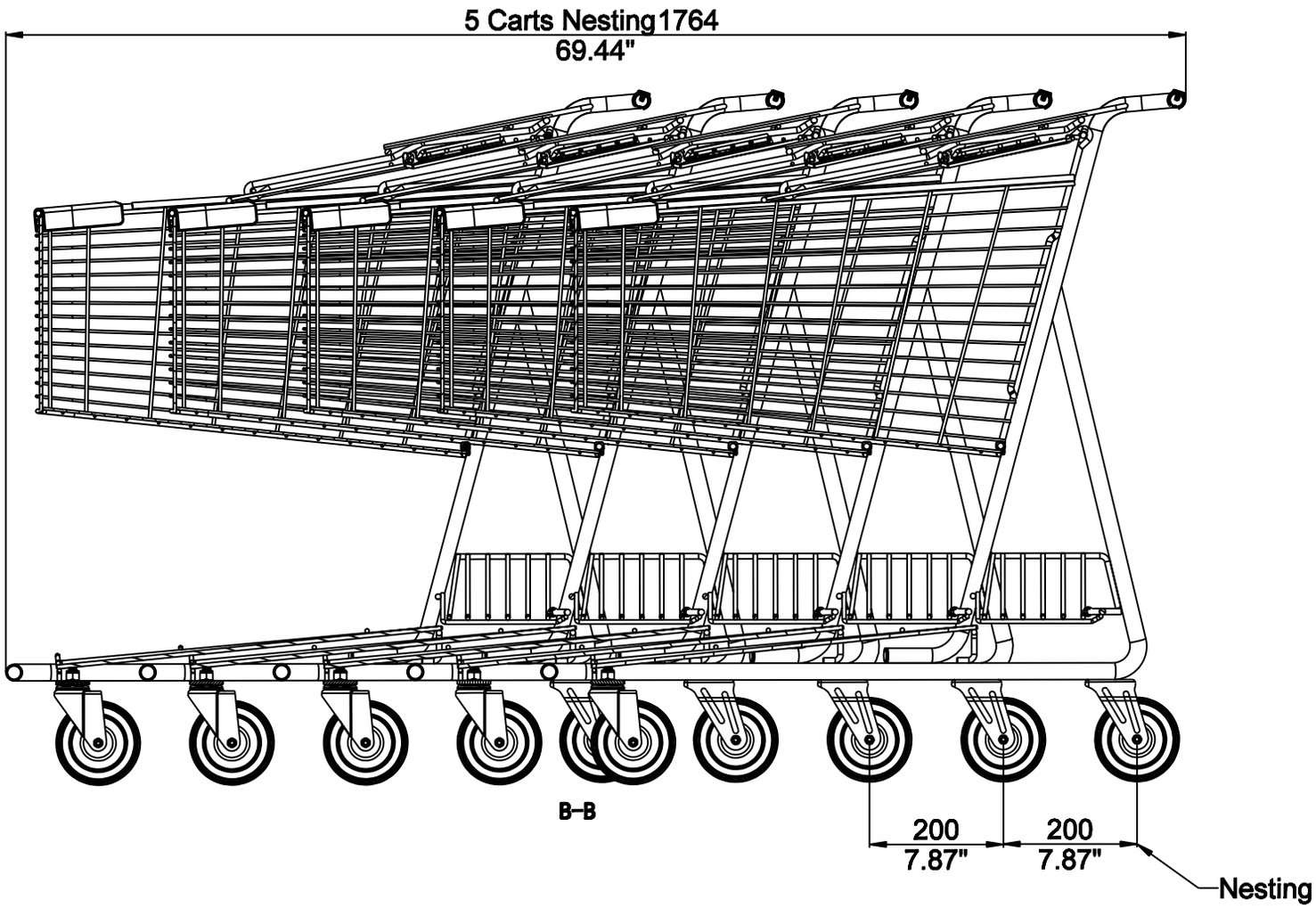

Designs and drawings are confidential.
Designs, drawings and products are the property of Versacart Systems, Inc.

101-C115-T V00120190309