versacart

1	1035 [40.75"]
2	1040 [40.94"]
3	590[23.23"]

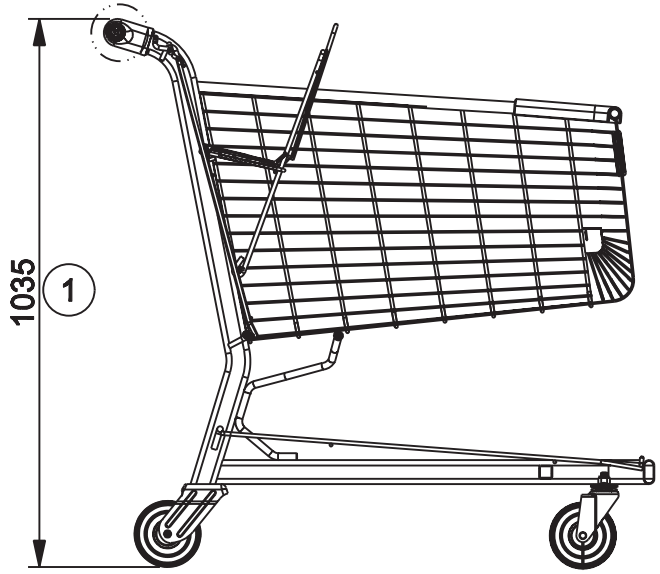

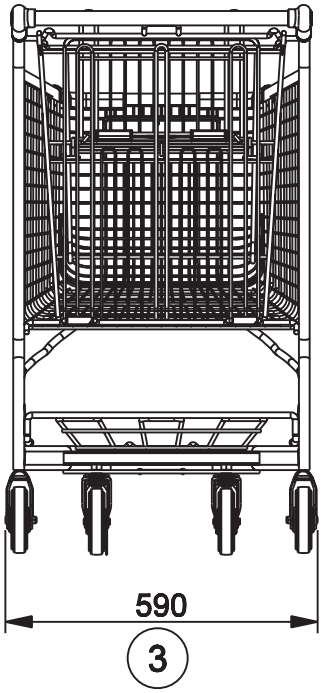

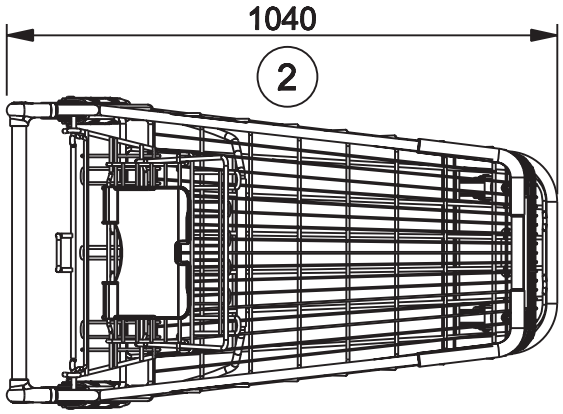

www.versacart.com (800) 690-9112

D E-160 V003.20140313

Property of AMSA, Inc. dba VersaCart Systems, Inc Copyright © VersaCart 2014; All rights reserved.